2013 HOLLOWGRAM Si SL2 ROAD

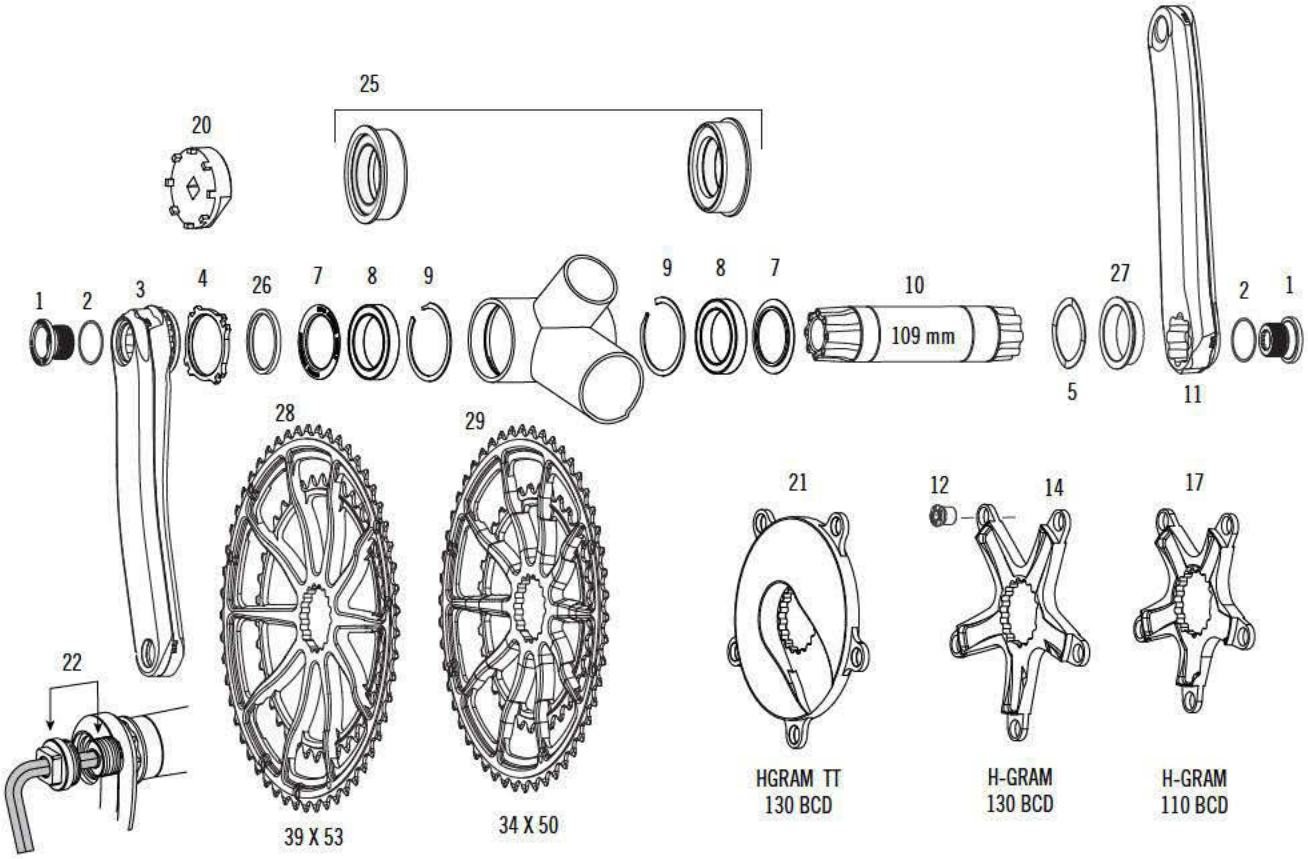

NO. (QTY)	CODE	DESCRIPTION
1,2,3,4,11, (28 or 29)	KA049/170BLK	KIT,CRANKSET,SL2,ROAD 39/53,170
	KA049/172BLK	KIT,CRANKSET,SL2,ROAD 39/53,172
	KA049/175BLK	KIT,CRANKSET,SL2,ROAD 39/53,175
	KA050/170BLK	KIT,CRANKSET,SL2,ROAD 34/50,170
	KA050/172BLK	KIT,CRANKSET,SL2,ROAD 34/50,172
	KA050/175BLK	KIT,CRANKSET,SL2,ROAD 34/50,175
28	KP244/	KIT,SPIDER RINGS, 39/53
29	KP245/	KIT,SPIDER RINGS, 34/50
17	QC693/	KIT,SPIDER,H-GRAM SI,110MM BCD
14	QC694/	KIT,SPIDER,H-GRAM SI,130MM BCD
21	KP137/	KIT,SPIDER,H-GRAM AERO,130BCD
12	KF360/	KIT,BOLT,SI C-RING, MK4/5 ONLY
4	KP021/	KIT,LOCKRING-SL --REQUIRES KT012/
11	KP246/170L	KIT,CRANKARM-SL2 BLK,170 LFT
	KP246/172L	KIT,CRANKARM-SL2 BLK,172 LFT
	KP246/175L	KIT,CRANKARM-SL2 BLK,175 LFT
3	KP246/170R	KIT,CRANKARM-SL2 BLK,170 RHT
	KP246/172R	KIT,CRANKARM-SL2 BLK,172 RHT
	KP246/175R	KIT,CRANKARM-SL2 BLK,175 RHT

NO. (QTY)	CODE	DESCRIPTION
5, 7, 8, 9,10, 26, 27	KP247/	KIT,BB,CDALE SL2,68X109 CERAMIC
5, 7, 25, 10, 26, 27	KP248/	KIT,BB,CDALE SL2,68X109 PRESSFIT 30
	KP218/	KIT,LOCTITE 609 W/ACTIVATOR
9	QC616/	KIT,CIRCLIP,BB-SI
8	KB6180/	KIT,BEARING,BB-SI;2PCS (SKF#6806-2RS /SRI2 /90% FILL)
8	KP018/	KIT,BEARING,BB-SI,CERAMIC;2PCS
25	KP197/	KIT,BEARING,BB-PRESSFIT 30
25	KP197/SRM	KIT,BEARING,BB-PRESSFIT 30 SRM
7	KP249/BLK	KIT,BEARING SHIELD,BB-SL2
10	KP250/	KIT,SPINDLE-SL2 ROAD 109
1,2	KP251/BLK	KIT,CRANK BOLTS,H-GRAM SL2,(2)
5	QC618/	KIT,WASHER-WAVE, BB-SI
	KP009/	KIT,ADAPTER,SIBB TO 68MM TAP
	KT010/	KIT,TOOL-BB BEARING-SI; (INSTALL)
	KT011/	KIT,TOOL - BEARING REMOVAL SI;
20	KT012/	KIT,TOOL-LOCK RING-SI
22	KT013/	KIT,CRANK EXTRACTION TOOL; 2 PIECES
	KF365/	KIT,TOOL,SIBB/68 ADP.INSTALL
	KF366/	KIT,TOOL,SIBB ADPAPTER EXTRACT

© CYCLING SPORTS GROUP, INC. RETALER SERVICE: 1-800-BIKE (2435) RETAILER FAX: 1-800-429-8464 CUSTSERV@CYCLINGSPORTSGROUP.COM

Cannondale Kits List - 06/01/2012
Cannondale kit numbers are shown in ***BOLD ITALIC***.
Illustrations are for part reference only, not assembly instructions.
All information is subject to change without notice.

cannondale